Submit by Email | Print Form

sterling
Process Engineering and Services, Inc.

333 McCormick Blvd. Columbus, Ohio 43213-1526
(614) 868-5151 FAX (614) 868-5152 sales@sterlingpe.com

CUSTOMER_____
ADDRESS_____
CITY, STATE ZIP_____
TELEPHONE # (____)_____X_____ FAX # _____
CONTACT NAME _____
E-MAIL ADDRESS _____
INSTALLING LOCATION: CITY, STATE _____
TODAY'S DATE_____QUOTE DATE_____
ORDER DATE_____SHIP DATE_____

TO BE COMPLETED BY STERLING:
BID# JOB#

TANK PROPOSAL WORKSHEET (SHEET 1 OF 2)

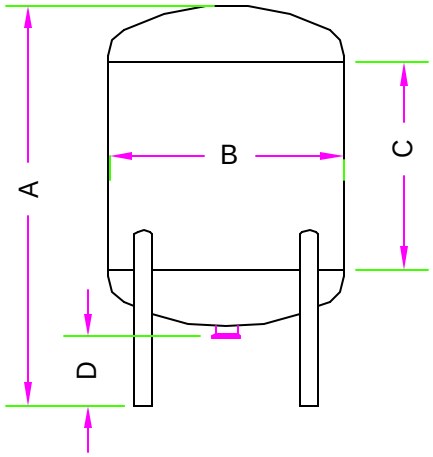

DIMENSIONS IN INCHES

"A"	"B"	"C"	"D"

GENERAL SPECIFICATIONS:

PRODUCT WITHIN VESSEL_____LIQUID/GAS/PARTICLES
QUANTITY OF TANK_____TANK CAPACITY _____GAL/LITERS
MATERIAL OF CONSTRUCTION (SS 304/SS 316, OTHER_____)
PRODUCT CONTACT SURFACE_____
NON-PRODUCT CONTACT SURFACE_____
TANK MATERIAL FINISH APPLICATION: • NEW • REPLACEMENT
INTERNAL _____SANITARY OR GRIT/RA VALUE
EXTERNAL _____SANITARY OR GRIT/RA VALUE
DESIGN LIQUID TEMPERATURE _____°C/°F IN _____°C/°F OUT
HEATING/COOLING MEDIUM (IF APPLICABLE) _____
ASME CODE: • NO • YES,SPECIFY_____
HEAT TRANSFER JACKET: • YES • NO INSULATION JACKET: • YES • NO
CLEANING: • STEAM STERILIZATION • WATER • CIP FREQUENCY_____
DESIGN LOCATION TEMPERATURE RANGE:_____°C/°F
PHYSICAL RESTRICTIONS, PLEASE SKETCH:_____

TOP HEAD

- NONE
- ELLIPTICAL
- FLANGED & DISHED
- FLAT

COVER TYPE

- FIXED
- REMOVABLE

COVER CLOSURE

- WELDED
- BOLT THRU
- SWING BOLT
- CLAMP

COVER ACCESSORIES

- PIANO HINGED
- DAVIT ARM
- LAP OVER HINGED

LEGS & SUPPORTS

- NONE
- LEGS TOTAL QTY. _____
- BOLTING PADS
- FOOT PADS
- CASTERS
  - RIGID QTY._____
  - SWIVEL QTY._____
  - SWIVEL/LOCKING QTY._____
- SIDE MOUNTING BRACKETS
- LIFTING LUGS
- LOAD CELLS

ACCESSORIES

- MANWAY_____
- SIGHT GLASS_____
- THERMOWELL_____
- LEVEL SENSOR_____
- VENT FILTER_____
- RUPTURE DISK_____
- HANDHOLE_____
- OTHER_____

_____

_____

(SHOW LOCATION ON SHT. 2)

BOTTOM HEAD

- NONE
- ELLIPTICAL
- FLANGED & DISHED
- FLAT
- CONICAL
- OTHER
- COMPLETE DRAINABILITY REQ'D

HEAT TRANSFER

JACKET TYPE

- DIMPLED
- INSULATED

HEATING/COOLING ZONE

- SIDE
- BOTTOM
- TOP

AGITATION

MOUNTING:
- FLANGED
- SIDE BRACKET
- CENTER BRIDGE
- OTHER_____

SEAL TYPE:
- GLAND PACKED
- MECHANICAL
- 0-RING
- PHARMACUTICAL

MATERIAL_____

LOCATION:
- TOP ENTRY
- BOTTOM/MAGNETIC

TYPE:
- ELECTRIC
- AIR

MOTOR/ELECTRICAL SPECIFICATIONS

PHASE_____ CYCLE_____ VOLTS_____

- SINGLE SPEED
- TWO-SPEED
- VARIABLE SPEED
- AC
- DC
- EASY CLEAN
- EXPLOSION PROOF
- TOTALLY ENCLOSED

DESIRED SPEED/SPEED RANGE _____RPM

© 2001 Sterling Proc. Eng'rg

sterling
Process Engineering and Services, Inc.
333 McCormick Blvd. Columbus, Ohio 43213-1526
(614) 868-5151 FAX (614) 868-5152 sales@sterlingpe.com

TO BE COMPLETED BY STERLING:
BID# JOB#

CUSTOMER_____
ADDRESS_____
CITY, STATE ZIP_____
TELEPHONE # (____)_____X_____ FAX # _____
CONTACT NAME _____
E-MAIL ADDRESS _____
INSTALLING LOCATION: CITY, STATE _____
TODAY'S DATE_____QUOTE DATE_____
ORDER DATE_____SHIP DATE_____

TANK PROPOSAL WORKSHEET (SHEET 2 OF 2)

NOZZLES & FITTINGS LOCATIONS (SKETCH IN & DIMENSION)

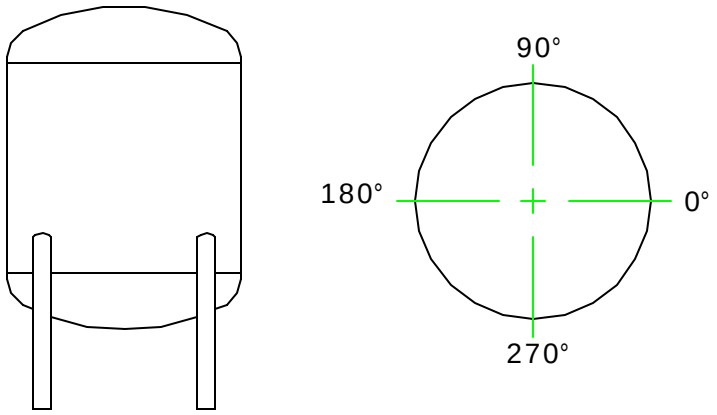

TOP PORTS

TYPE	SIZE	ROTATION	QUANTITY
FLANGE			
TRI-CLAMP			
NIPPLE			
COUPLING			
OTHER			

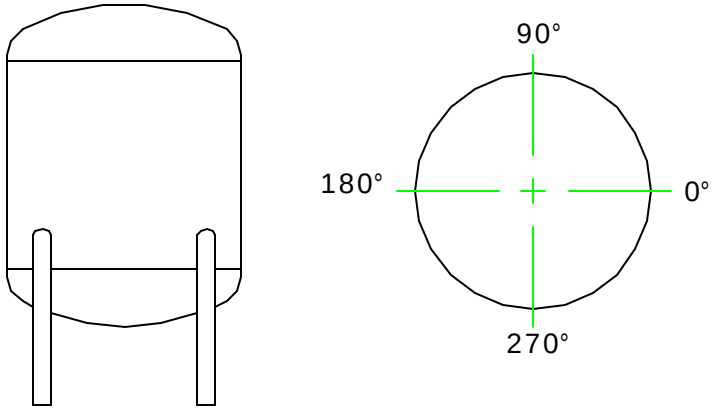

BOTTOM PORTS

TYPE	SIZE	ROTATION	QUANTITY
FLANGE			
TRI-CLAMP			
NIPPLE			
COUPLING			
OTHER			

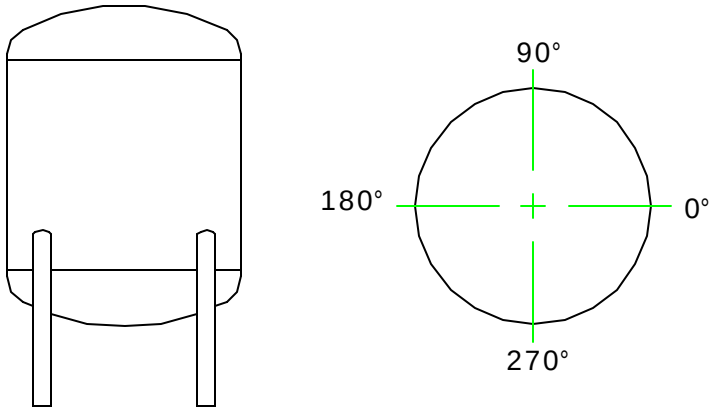

SIDE PORTS

TYPE	SIZE	ROTATION	QUANTITY
FLANGE			
TRI-CLAMP			
NIPPLE			
COUPLING			
OTHER			

© 2001 Sterling Proc. Eng'rg