PARTS LIST		
ITEM	QTY	DESCRIPTION
1	1	UTILITY CART WLDMT, DUAL SHLF
2	2	CASTER, RIGID, 8"
3	2	CASTER, SWIVEL, 8"
4	16	BOLT HEX HEAD 304 .38-16X1
5	16	HELICAL SPRING LOCK WASHER, 3/8, SS
6	16	NUT HEX 304 .375-16
7	16	WASHER FLAT 304 .375

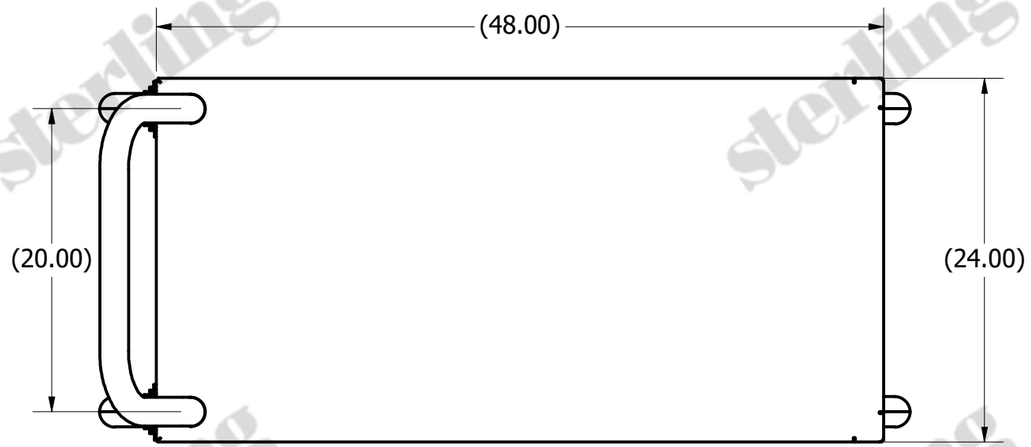

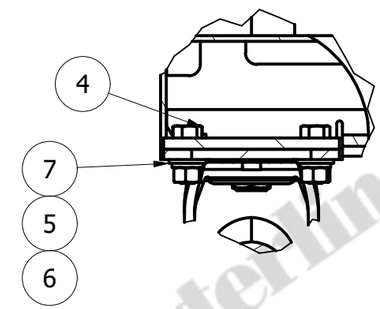

DETAIL A

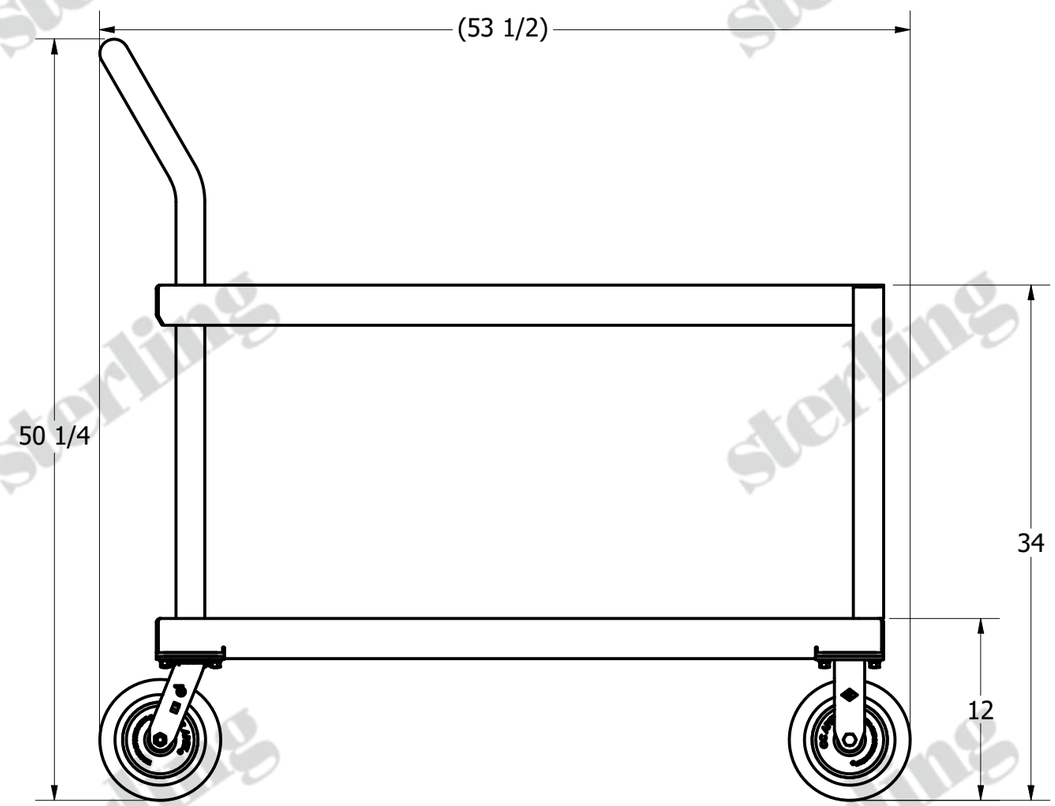

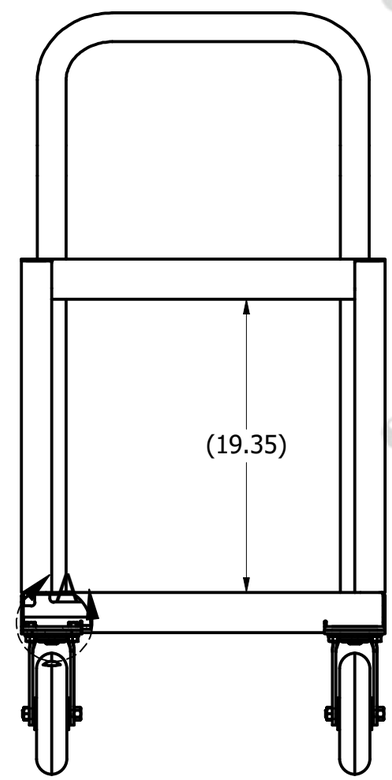

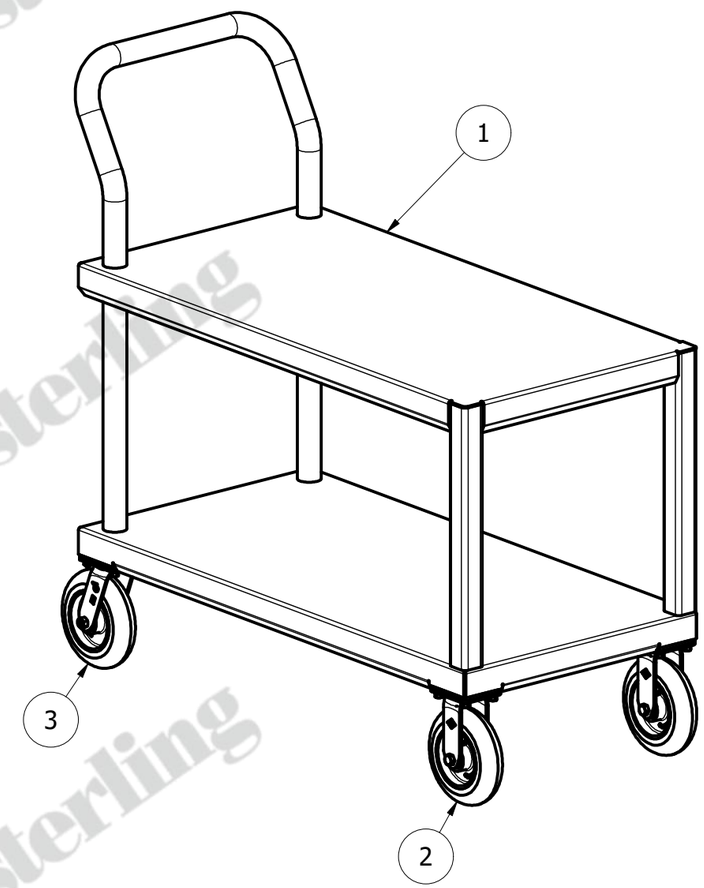

NOTES:
1. MATERIAL: 304SS

sterling
Process Equipment and Services, Inc.
333 McCormick Blvd
Columbus, Ohio 43213-1526
Ph: (614) 868-5151 (800) 783-7875
www.sterlingpe.com sales@sterlingpe.com

UTILITY CARTS

UTILITY CART ASSY, DUAL SHLF

Project Mgr: JJM	TOLERANCE UNLESS OTHERWISE SPECIFIED		
Drawn By: JModer	DISPLAY	TOL +/-	
Checked By:	ANGLE	5	
Scale: NTS	FRACTION	1/16	
	X.XX	.01	
	X.XXX	.005	
Sheet 1 of 2	Date 3/31/2021		
Dwg. No. C0001-03-0000			

The information, data and drawings embodied in this document are the ownership of Sterling Process Engineering and Services, Inc. understanding that they will not be disclosed to third parties without prior written consent of Sterling Process Engineering and Services, Inc.

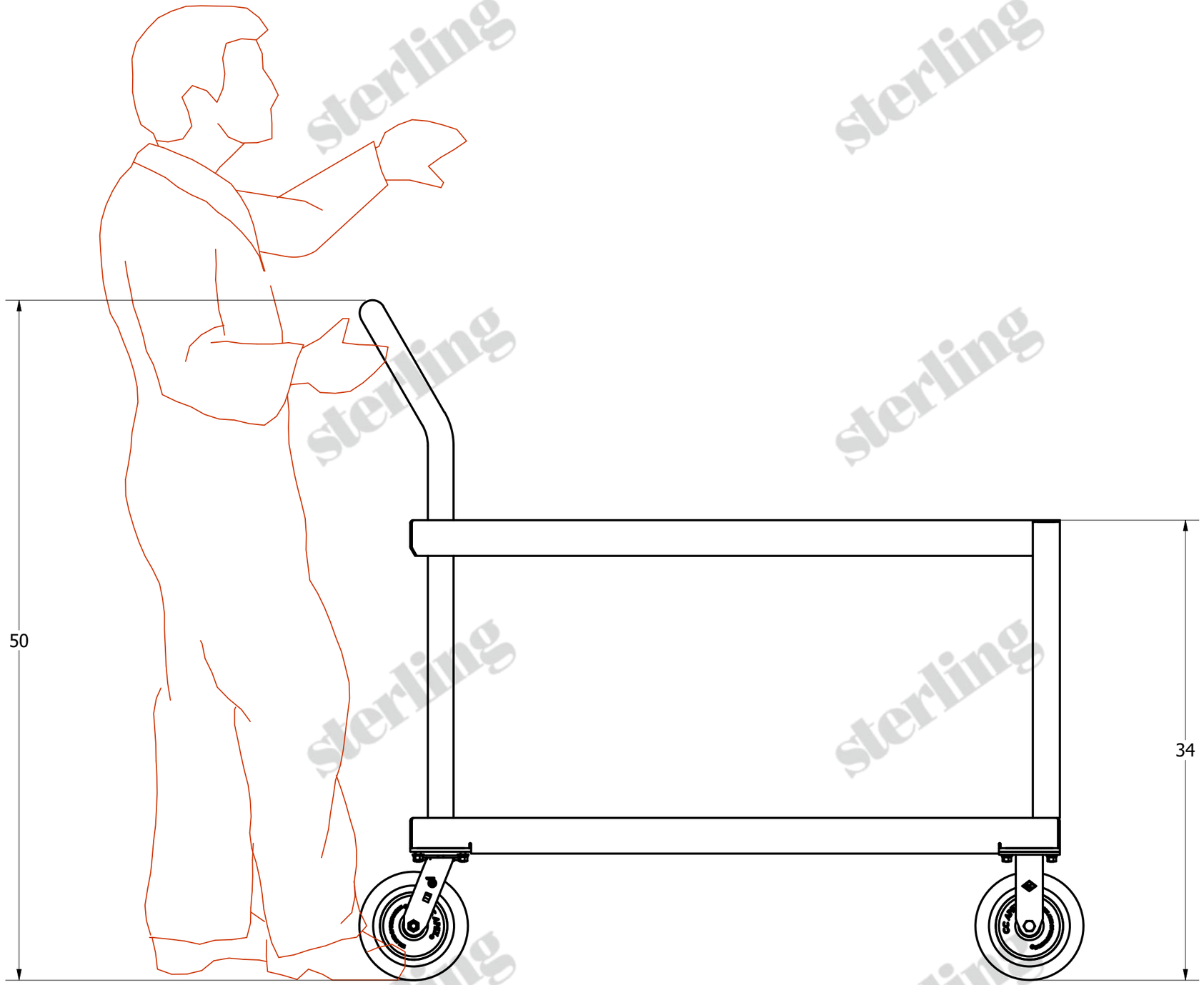

sterling
Process Equipment and Services, Inc.

333 McCormick Blvd
Columbus, Ohio 43213-1526
Ph: (614) 868-5151 (800) 783-7875
www.sterlingpe.com sales@sterlingpe.com

UTILITY CARTS

UTILITY CART ASSY, DUAL SHLF

The information, data and drawings embodied in this document are the ownership of Sterling Process Engineering and Services, Inc. understanding that they will not be disclosed to third parties without prior written consent of Sterling Process Engineering and Services, Inc.

TOLERANCE UNLESS OTHERWISE SPECIFIED
DISPLAY TOL +/-
ANGLE ±5
FRACTION 1/16
X.XX .01
X.XXX .005

Project Mgr: JM
Drawn By: JModer
Checked By:
Scale: NTS
Sheet 2 Of 2
Date 3/31/2021
Dwg. No. C0001-03-0000